# U3-3580ML-C-HQ (AB00670)

**Discontinued**
The model has been discontinued.

## Specification

### Sensor

| | |
|---|---|
| Sensor type | CMOS Color |
| Shutter | Rolling shutter |
| Sensor characteristic | Linear |
| Readout mode | Progressive scan |
| Pixel Class | 5 MP |
| Resolution | 4.92 Mpix |
| Resolution (h x v) | 2560 x 1920 Pixel |
| Aspect ratio | 4:3 |
| ADC | 12 bit |
| Color depth (camera) | 12 bit |
| Optical sensor class | 1/2.5"" |
| Optical Size | 5.632 mm x 4.224 mm |
| Optical sensor diagonal | 7.04 mm (1/2.27") |
| Pixel size | 2.2 µm |
| Manufacturer | Onsemi |
| Sensor Model | MT9P006STC |
| Gain (master/RGB) | 12.2x/5.8x |
| AOI horizontal | same frame rate |
| AOI vertical | increased frame rate |
| AOI image width / step width | 80 / 4 |
| AOI image height / step width | 60 / 2 |
| AOI position grid (horizontal/vertical) | 2 / 2 |
| Binning horizontal | increased frame rate |
| Binning vertical | increased frame rate |
| Binning method | M/C automatic |
| Binning factor | 2 / 4 |
| Subsampling horizontal | - |
| Subsampling vertical | - |
| Subsampling method | - |
| Subsampling factor | - |

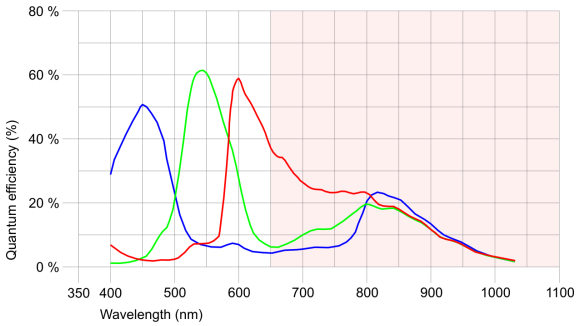





ABBAS, a.s.
Edisonova 5 · 612 00 Brno · Phone +420 541/240-956 · Fax +420 541/240-955 · E-Mail info@analyza-obrazu.cz

## Model

| | |
|---|---|
| Frame rate freerun mode | 12 |
| Frame rate trigger (maximum) | - |
| Exposure time (minimum - maximum) | 0.037 ms - 1959 ms |
| Power consumption | 1.4 W - 1.7 W |

## Ambient conditions

The temperature values given below refer to the outer device temperature of the camera housing.

| | |
|---|---|
| Device temperature during operation | 0 °C - 55 °C / 32 °F - 131 °F |
| Device temperature during storage | -20 °C - 60 °C / -4 °F - 140 °F |
| Humidity (relative, non-condensing) | 20 % - 80 % |

## Connectors

| | |
|---|---|
| Interface connector | USB 3.0 micro-B, screwable |
| I/O connector | 8-pin Hirose connector (HR25-7TR-8PA(73)) |
| Power supply | USB cable |

## Pin assignment I/O connector

| | |
|---|---|
| 1 | Ground (GND) |
| 2 | Flash output with optocoupler (-) |
| 3 | General Purpose I/O (GPIO) 1 |
| 4 | Trigger input with optocoupler (-) |
| 5 | Flash output with optocoupler (+) |
| 6 | General Purpose I/O (GPIO) 2 |
| 7 | Trigger input with optocoupler (+) |
| 8 | Output supply voltage, 5 V (100 mA) |

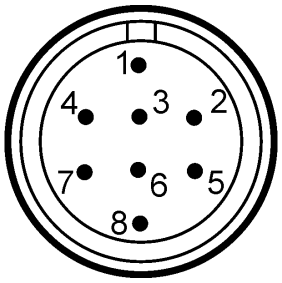


Camera rear view

## Design

| | |
|---|---|
| Lens Mount | CS- / C-Mount |
| IP code | IP30 |
| Dimensions H/W/L | 47.0 mm x 46.0 mm x 28.0 mm |
| Mass | 41 g |



ABBAS, a.s.
Edisonova 5 · 612 00 Brno · Phone +420 541/240-956 · Fax +420 541/240-955 · E-Mail info@analyza-obrazu.cz

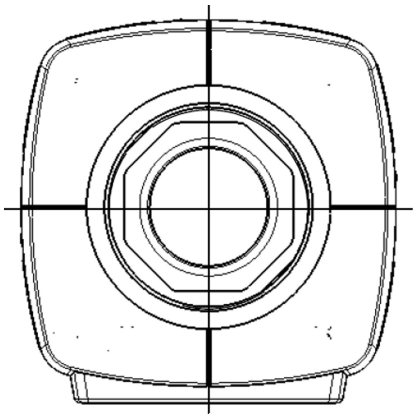

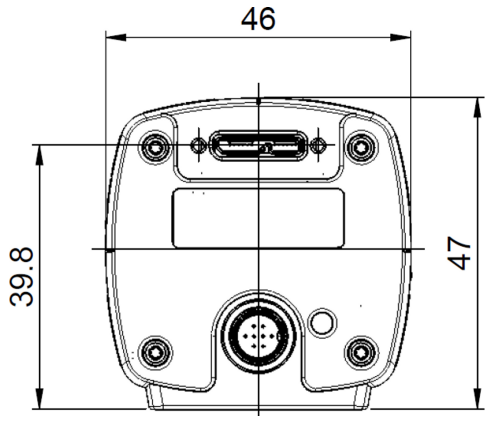


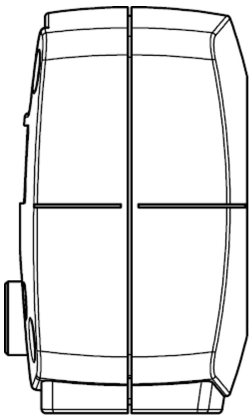

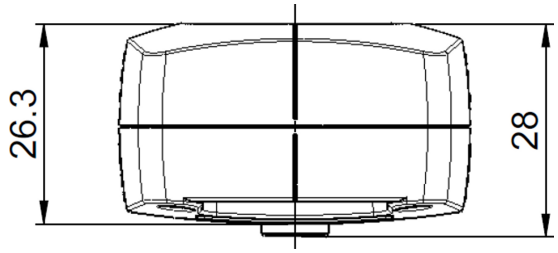


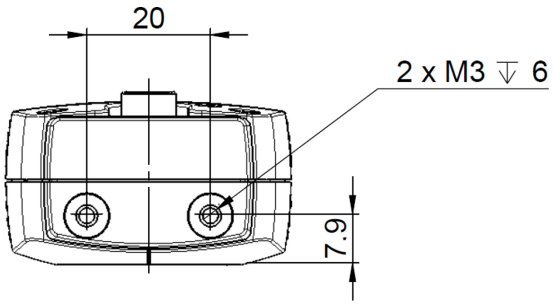




ABBAS, a.s.
Edisonova 5 · 612 00 Brno · Phone +420 541/240-956 · Fax +420 541/240-955 · E-Mail info@analyza-obrazu.cz