UI-1461SE-C-HQ (AB.0010.1.11510.24)

Discontinued

uEye industrial cameras now also work with IDS peak! We recommend the Software Development Kit for the implementation of new projects. Learn about the process here and switch now.
Please note: The technical data given here was measured using the IDS Software Suite.

Specification

Sensor

Sensor type	CMOS Color
Shutter	Rolling shutter
Sensor characteristic	Linear
Readout mode	Progressive scan
Pixel Class	3 MP
Resolution	3.15 Mpix
Resolution (h x v)	2048 x 1536 Pixel
Aspect ratio	4:3
ADC	10 bit
Color depth (camera)	8 bit
Optical sensor class	1/2""
Optical Size	6.554 mm x 4.915 mm
Optical sensor diagonal	8.19 mm (1/1.95")
Pixel size	3.2 µm
Manufacturer	Onsemi
Sensor Model	MT9T001
Gain (master/RGB)	12.1x/7.3x
AOI horizontal	increased frame rate
AOI vertical	increased frame rate
AOI image width / step width	16 / 4
AOI image height / step width	4 / 2
AOI position grid (horizontal/vertical)	4 / 2
Binning horizontal	increased frame rate
Binning vertical	increased frame rate
Binning method	Color
Binning factor	2 / 3 / 4 / 6
Subsampling horizontal	increased frame rate
Subsampling vertical	increased frame rate
Subsampling method	Color
Subsampling factor	2, 3, 4, 5, 6, 8

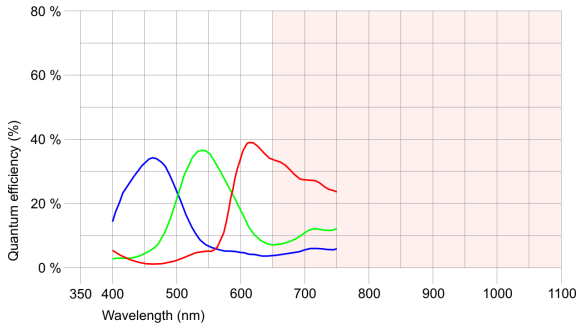

Model

Pixel clock range	5 MHz - 43 MHz
Frame rate freerun mode	11
Frame rate trigger (maximum)	11
Exposure time (minimum - maximum)	0.057 ms - 1744 ms
Power consumption	0.4 W - 0.7 W

IDS Imaging Development Systems GmbH
Dimbacher Str. 10 · 74182 Obersulm · Germany · Phone +49 7134 96196-0 · E-mail info@ids-imaging.com

Ambient conditions

The temperature values given below refer to the outer device temperature of the camera housing.
For PCB versions, refer to the separate hints in the respective documentation.

Device temperature during operation	0 °C - 55 °C / 32 °F - 131 °F
Device temperature during storage	-20 °C - 60 °C / -4 °F - 140 °F
Humidity (relative, non-condensing)	20 % - 80 %

Connectors

Interface connector	USB 2.0 mini-B, screwable
I/O connector	9-pin micro D-Sub socket (MPE Garry 11-0021-50-09L)
Power supply	USB cable

Pin assignment I/O connector

1	Flash output with optocoupler (-)
2	Trigger input with optocoupler (+)
3	Shielding
4	USB Power supply (VCC) 5 V
5	USB Ground (GND)
6	Flash output with optocoupler (+)
7	Trigger input with optocoupler (-)
8	USB data (+)
9	USB data (-)

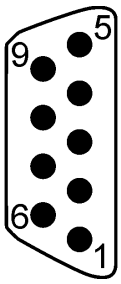

Camera rear view

Design

Lens Mount	C-Mount
IP code	-
Dimensions H/W/L	30.0 mm x 30.0 mm x 41.3 mm
Mass	43 g

IDS Imaging Development Systems GmbH
Dimbacher Str. 10 · 74182 Obersulm · Germany · Phone +49 7134 96196-0 · E-mail info@ids-imaging.com

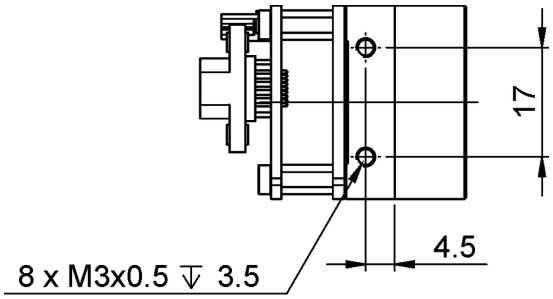

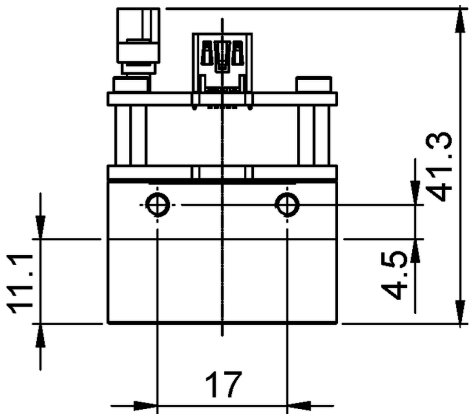

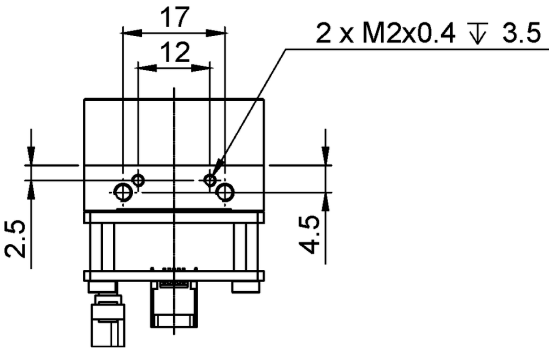

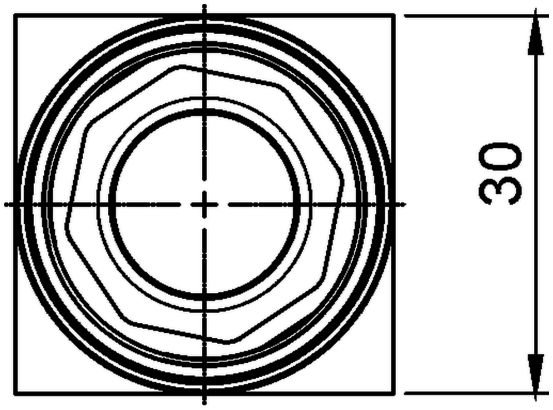

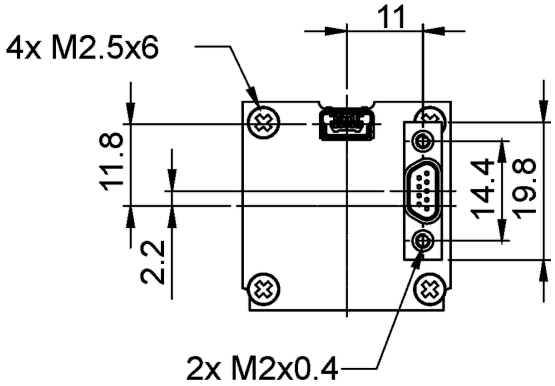

IDS Imaging Development Systems GmbH
Dimbacher Str. 10 · 74182 Obersulm · Germany · Phone +49 7134 96196-0 · E-mail info@ids-imaging.com