UI-1221SE-M-NO (AB.0010.1.11810.56)

Discontinued
The model has been discontinued.

uEye industrial cameras now also work with IDS peak! We recommend the Software Development Kit for the implementation of new projects. Learn about the process here and switch now.
Please note: The technical data given here was measured using the IDS Software Suite.

Specification

Sensor

Sensor type	CMOS Mono
Shutter	Global Shutter
Sensor characteristic	Linear with knee points
Readout mode	Progressive scan
Pixel Class	0.4 MP
Resolution	0.36 Mpix
Resolution (h x v)	752 x 480 Pixel
Aspect ratio	14:9
ADC	10 bit
Color depth (camera)	8 bit
Optical sensor class	1/3""
Optical Size	4.512 mm x 2.880 mm
Optical sensor diagonal	5.35 mm (1/2.99")
Pixel size	6 µm
Manufacturer	Onsemi
Sensor Model	MT9V032C12STM
Gain (master/RGB)	4x/-
AOI horizontal	increased frame rate
AOI vertical	increased frame rate
AOI image width / step width	16 / 4
AOI image height / step width	4 / 2
AOI position grid (horizontal/vertical)	4 / 2
Binning horizontal	increased frame rate
Binning vertical	increased frame rate
Binning method	Mono
Binning factor	2 / 3
Subsampling horizontal	-
Subsampling vertical	-
Subsampling method	-
Subsampling factor	-

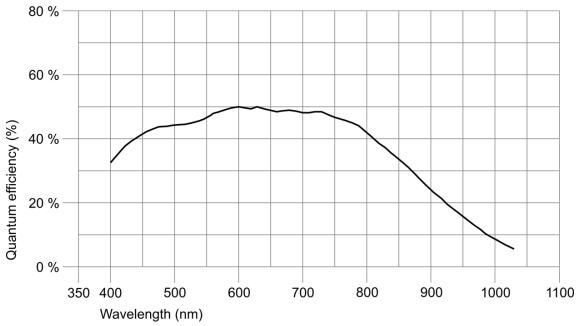

Model

Pixel clock range	5 MHz - 40 MHz
Frame rate freerun mode	87
Frame rate trigger (maximum)	83
Exposure time (minimum - maximum)	0.080 ms - 5580 ms
Power consumption	0.4 W - 1 W

Ambient conditions

The temperature values given below refer to the outer device temperature of the camera housing.
For PCB versions, refer to the separate hints in the respective documentation.

Device temperature during operation	0 °C - 55 °C / 32 °F - 131 °F
Device temperature during storage	-20 °C - 60 °C / -4 °F - 140 °F
Humidity (relative, non-condensing)	20 % - 80 %

IDS Imaging Development Systems GmbH
Dimbacher Str. 10 · 74182 Obersulm · Germany · Phone +49 7134 96196-0 · E-mail info@ids-imaging.com

Connectors

Interface connector	USB 2.0 mini-B, screwable
I/O connector	9-pin micro D-Sub socket (MPE Garry 11-0021-50-09L)
Power supply	USB cable

Pin assignment I/O connector

1	Flash output with optocoupler (-)
2	Trigger input with optocoupler (+)
3	Shielding
4	USB Power supply (VCC) 5 V
5	USB Ground (GND)
6	Flash output with optocoupler (+)
7	Trigger input with optocoupler (-)
8	USB data (+)
9	USB data (-)

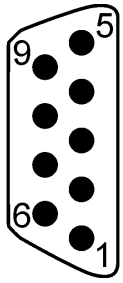

Camera rear view

Design

Lens Mount	C-Mount
IP code	-
Dimensions H/W/L	30.0 mm x 30.0 mm x 41.3 mm
Mass	43 g

IDS Imaging Development Systems GmbH
Dimbacher Str. 10 · 74182 Obersulm · Germany · Phone +49 7134 96196-0 · E-mail info@ids-imaging.com

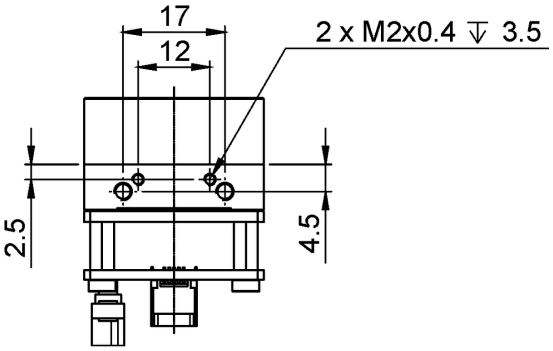

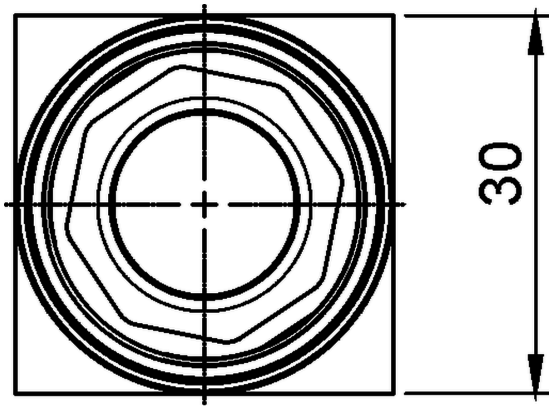

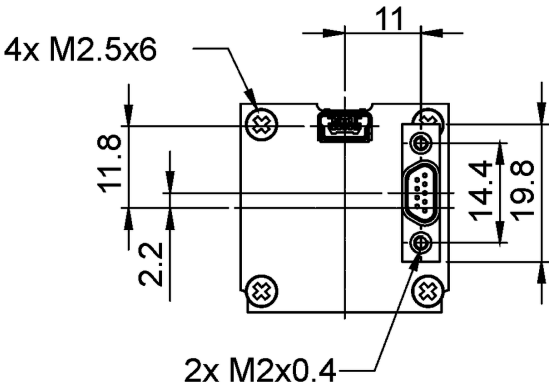

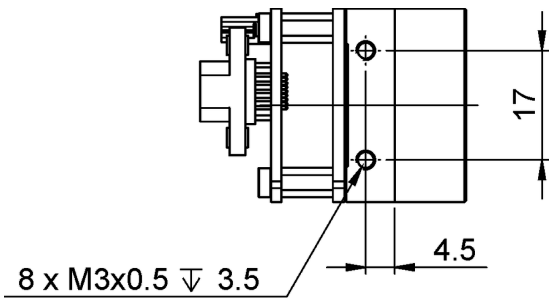

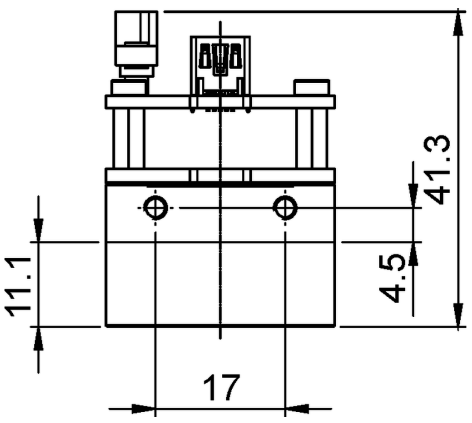

IDS Imaging Development Systems GmbH
Dimbacher Str. 10 · 74182 Obersulm · Germany · Phone +49 7134 96196-0 · E-mail info@ids-imaging.com