UI-2221SE-M-BG (AB.0010.1.12210.00)

Discontinued
The model has been discontinued.

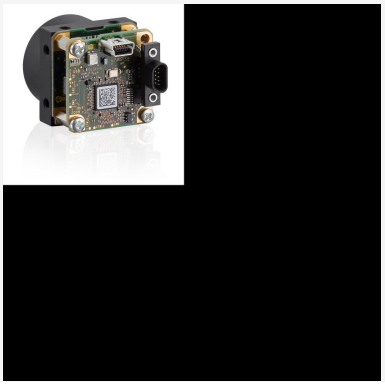

Specification

Sensor

Sensor type	CCD Mono
Shutter	Global Shutter
Sensor characteristic	Linear
Readout mode	Progressive scan
Pixel Class	0.4 MP
Resolution	0.44 Mpix
Resolution (h x v)	768 x 576 Pixel
Aspect ratio	4:3
ADC	12 bit
Color depth (camera)	8 bit
Optical sensor class	1/2""
Optical Size	6.374 mm x 4.781 mm
Optical sensor diagonal	7.97 mm (1/2.01")
Pixel size	8.3 µm
Manufacturer	Sony
Sensor Model	ICX415AL
Gain (master/RGB)	14.1x/-
AOI horizontal	same frame rate
AOI vertical	increased frame rate
AOI image width / step width	16 / 4
AOI image height / step width	120 / 1
AOI position grid (horizontal/vertical)	1 / 1
Binning horizontal	-
Binning vertical	increased frame rate
Binning method	Mono
Binning factor	2 / 3 / 4
Subsampling horizontal	-
Subsampling vertical	-
Subsampling method	-
Subsampling factor	-

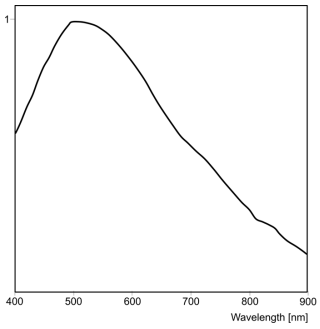

IDS Imaging Development Systems GmbH
Dimbacher Str. 10 · 74182 Obersulm · Germany · Phone +49 7134 96196-0 · E-mail info@ids-imaging.com

Model

Pixel clock range	5 MHz - 30 MHz
Frame rate freerun mode	52
Frame rate trigger (maximum)	49
Exposure time (minimum - maximum)	0.030 ms - 773 ms
Power consumption	1 W - 1.9 W

Ambient conditions

The temperature values given below refer to the outer device temperature of the camera housing. For PCB versions, refer to the separate hints in the respective documentation.

Device temperature during operation	0 °C - 55 °C / 32 °F - 131 °F
Device temperature during storage	-20 °C - 60 °C / -4 °F - 140 °F
Humidity (relative, non-condensing)	20 % - 80 %

Connectors

Interface connector	USB 2.0 mini-B, screwable
I/O connector	9-pin micro D-Sub socket (MPE Garry 11-0021-50-09L)
Power supply	USB cable

Pin assignment I/O connector

1	Flash output with optocoupler (-)
2	Trigger input with optocoupler (+)
3	Shielding
4	USB Power supply (VCC) 5 V
5	USB Ground (GND)
6	Flash output with optocoupler (+)
7	Trigger input with optocoupler (-)
8	USB data (+)
9	USB data (-)

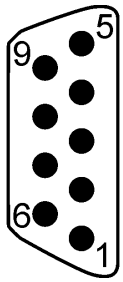

Camera rear view

Design

Lens Mount	C-Mount
IP code	-
Dimensions H/W/L	30.0 mm x 30.0 mm x 48.3 mm
Mass	51 g

IDS Imaging Development Systems GmbH
Dimbacher Str. 10 · 74182 Obersulm · Germany · Phone +49 7134 96196-0 · E-mail info@ids-imaging.com

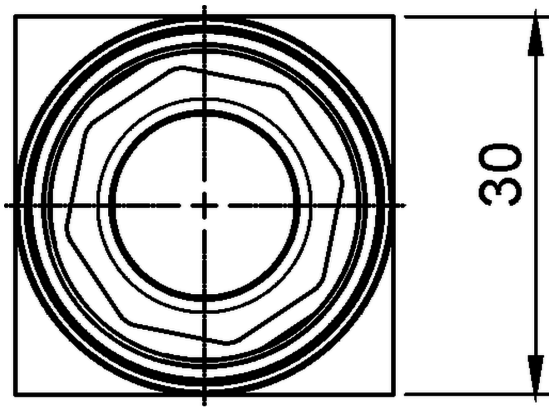

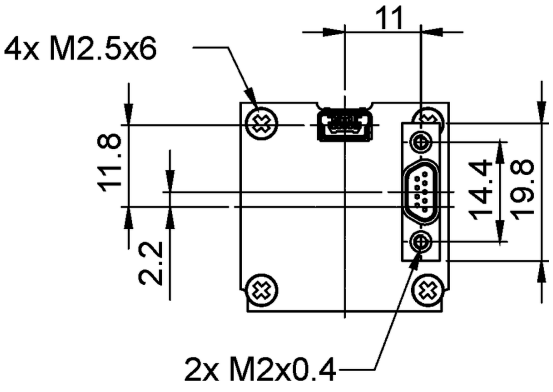

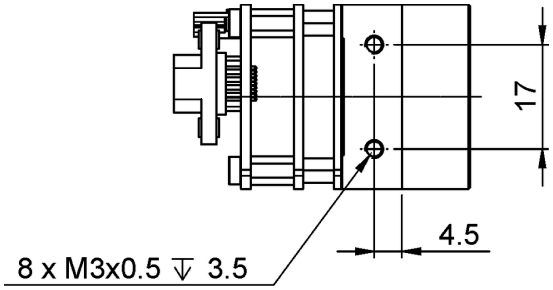

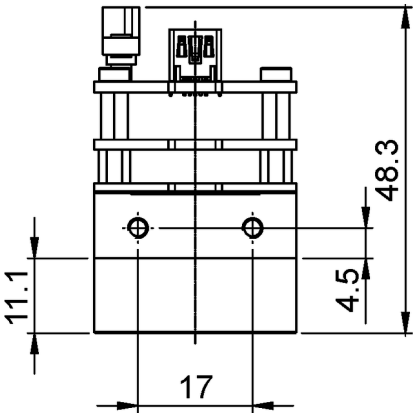

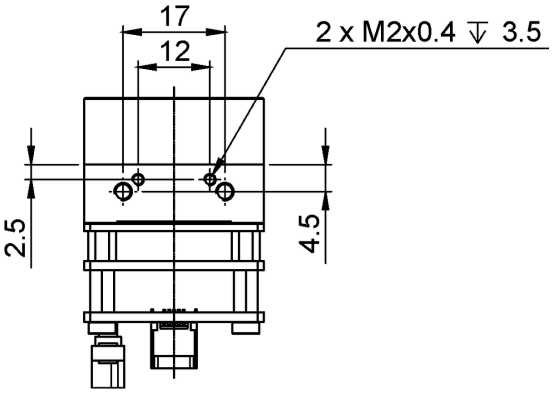

IDS Imaging Development Systems GmbH
Dimbacher Str. 10 · 74182 Obersulm · Germany · Phone +49 7134 96196-0 · E-mail info@ids-imaging.com