UI-6210RE-C-HQ Rev.2 (AB.0010.1.43802.24)

Discontinued
The model has been discontinued.

Specification

Sensor

Sensor type	CCD Color
Shutter	Global Shutter
Sensor characteristic	Linear
Readout mode	Progressive scan
Pixel Class	0.3 MP
Resolution	0.31 Mpix
Resolution (h x v)	640 x 480 Pixel
Aspect ratio	4:3
ADC	12 bit
Color depth (camera)	12 bit
Optical sensor class	1/2""
Optical Size	6.336 mm x 4.752 mm
Optical sensor diagonal	7.92 mm (1/2.02")
Pixel size	9.9 µm
Manufacturer	Sony
Sensor Model	ICX414AQ
Gain (master/RGB)	12x/4x
AOI horizontal	same frame rate
AOI vertical	increased frame rate
AOI image width / step width	16 / 4
AOI image height / step width	120 / 2
AOI position grid (horizontal/vertical)	2 / 2
Binning horizontal	-
Binning vertical	increased frame rate
Binning method	Mono
Binning factor	2 / 3 / 4
Subsampling horizontal	-
Subsampling vertical	-
Subsampling method	-
Subsampling factor	-

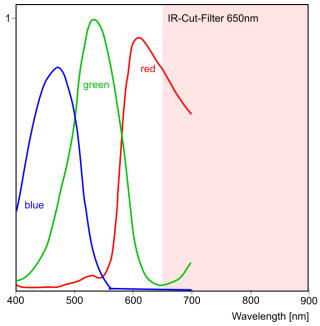

IDS Imaging Development Systems GmbH
Dimbacher Str. 10 · 74182 Obersulm · Germany · Phone +49 7134 96196-0 · E-mail info@ids-imaging.com

Model

Pixel clock range	5 MHz - 30 MHz
Frame rate freerun mode	75
Frame rate trigger (maximum)	69
Exposure time (minimum - maximum)	0.044 ms - 638 ms
Power consumption	1 W - 1.9 W
Image memory	60 MB

Ambient conditions

The temperature values given below refer to the outer device temperature of the camera housing.

Device temperature during operation	0 °C - 55 °C / 32 °F - 131 °F
Device temperature during storage	-20 °C - 60 °C / -4 °F - 140 °F
Humidity (relative, non-condensing)	0 % - 100 %

Connectors

Interface connector	GigE RJ45, screwable
I/O connector	7-pin Binder connector (Binder series 712: 09-0423-020-07)
Power supply	12 V - 24 V

Pin assignment I/O connector

1	Trigger input with optocoupler (+)
2	Power supply (VCC)
3	Shielding
4	Ground (GND)
5	Flash output with optocoupler (+)
6	Flash output with optocoupler (-)
7	Trigger input with optocoupler (-)

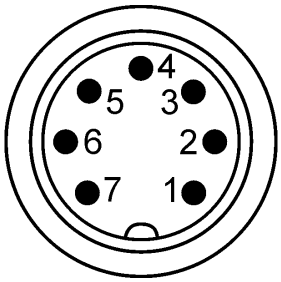

Camera rear view

Design

Lens Mount	C-Mount
IP code	IP65/67
Dimensions H/W/L	41.0 mm x 53.0 mm x 47.7 mm
Mass	195 g

IDS Imaging Development Systems GmbH
Dimbacher Str. 10 · 74182 Obersulm · Germany · Phone +49 7134 96196-0 · E-mail info@ids-imaging.com

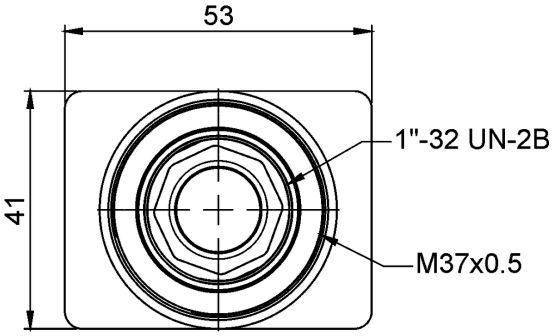

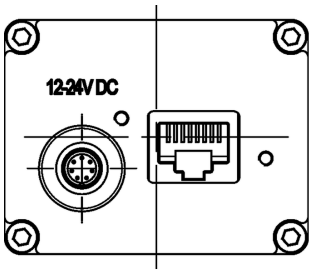

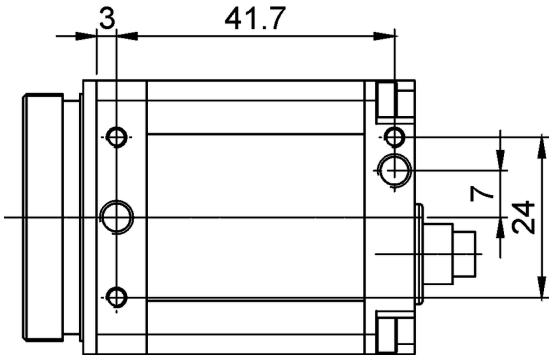

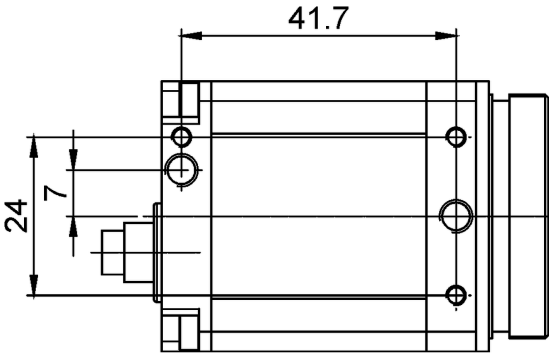

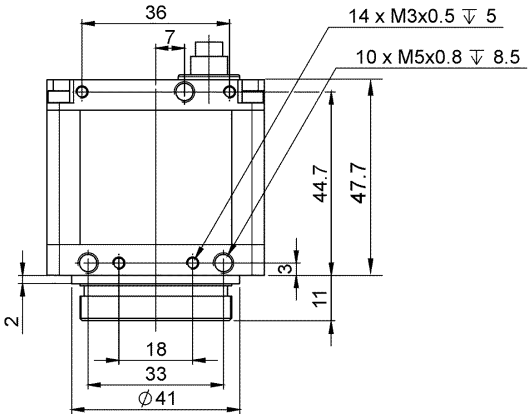

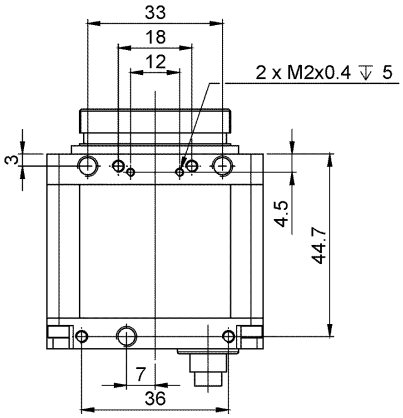

IDS Imaging Development Systems GmbH
Dimbacher Str. 10 · 74182 Obersulm · Germany · Phone +49 7134 96196-0 · E-mail info@ids-imaging.com