UI-6140RE-M-GL PoE Rev.3 (AB00325)

Discontinued
The model has been discontinued.

Specification

Sensor

Sensor type	CCD Mono
Shutter	Global Shutter
Sensor characteristic	Linear
Readout mode	Progressive scan
Pixel Class	1.3 MP
Resolution	1.23 Mpix
Resolution (h x v)	1280 x 960 Pixel
Aspect ratio	4:3
ADC	12 bit
Color depth (camera)	12 bit
Optical sensor class	1/3""
Optical Size	4.800 mm x 3.600 mm
Optical sensor diagonal	6 mm (1/2.67")
Pixel size	3.75 µm
Manufacturer	Sony
Sensor Model	ICX445ALA
Gain (master/RGB)	12x/-
AOI horizontal	same frame rate
AOI vertical	increased frame rate
AOI image width / step width	16 / 4
AOI image height / step width	4 / 2
AOI position grid (horizontal/vertical)	4 / 2
Binning horizontal	same frame rate
Binning vertical	increased frame rate
Binning method	Mono
Binning factor	2 / 3 / 4
Subsampling horizontal	-
Subsampling vertical	-
Subsampling method	-
Subsampling factor	-

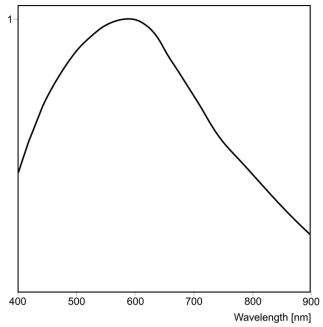

IDS Imaging Development Systems GmbH
Dimbacher Str. 10 · 74182 Obersulm · Germany · Phone +49 7134 96196-0 · E-mail info@ids-imaging.com

Model

Pixel clock range	10 MHz - 46 MHz
Frame rate freerun mode	28
Frame rate trigger (maximum)	28
Exposure time (minimum - maximum)	0.014 ms - 30000 ms
Power consumption	2.9 W - 3.7 W
Image memory	64 MB
Special features	Overlap trigger

Ambient conditions

The temperature values given below refer to the outer device temperature of the camera housing.

Device temperature during operation	0 °C - 55 °C / 32 °F - 131 °F
Device temperature during storage	-20 °C - 60 °C / -4 °F - 140 °F
Humidity (relative, non-condensing)	0 % - 100 %

Connectors

Interface connector	GigE M12, screwable
I/O connector	8-pin Binder connector (Binder series 712: 09-0427-020-08)
Power supply	12 V - 24 V or PoE

Pin assignment I/O connector

1	Trigger input with optocoupler (+)
2	Input power supply (VCC) 12-24 V DC
3	General Purpose I/O (GPIO) 1
4	Ground (GND)
5	Flash output with optocoupler (+)
6	Flash output with optocoupler (-)
7	Trigger input with optocoupler (-)
8	General Purpose I/O (GPIO) 2

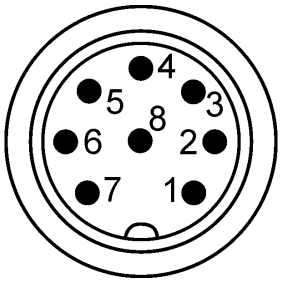

Camera rear view

Design

Lens Mount	C-Mount
IP code	IP65/67
Dimensions H/W/L	41.0 mm x 53.0 mm x 44.7 mm
Mass	175 g

IDS Imaging Development Systems GmbH
Dimbacher Str. 10 · 74182 Obersulm · Germany · Phone +49 7134 96196-0 · E-mail info@ids-imaging.com

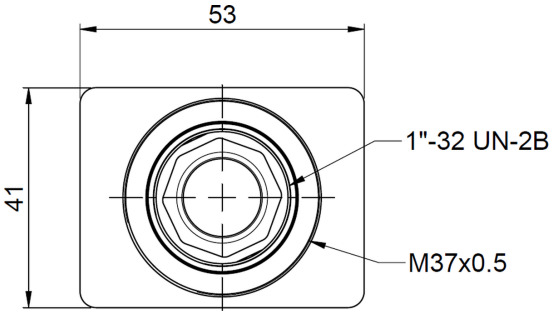

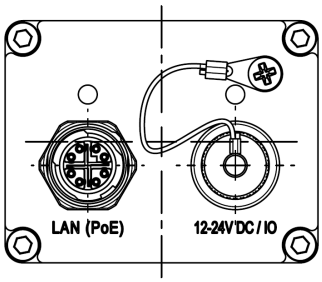

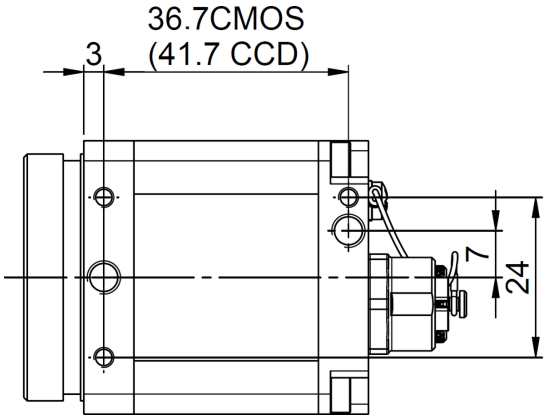

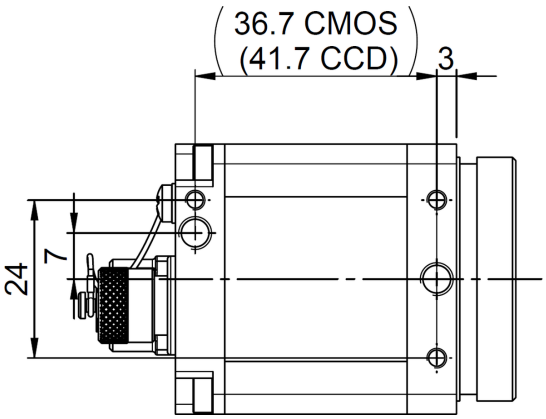

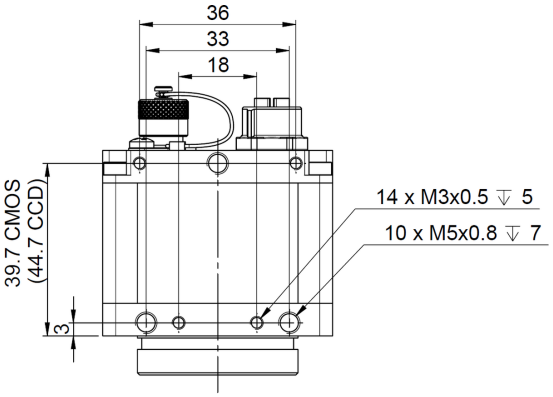

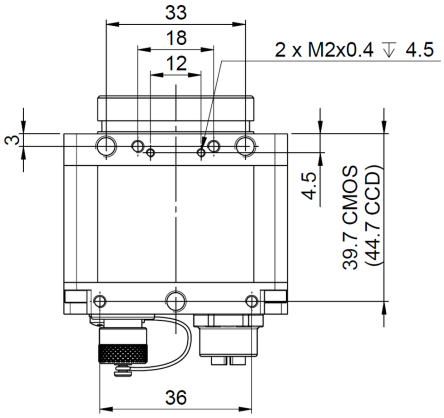

IDS Imaging Development Systems GmbH
Dimbacher Str. 10 · 74182 Obersulm · Germany · Phone +49 7134 96196-0 · E-mail info@ids-imaging.com